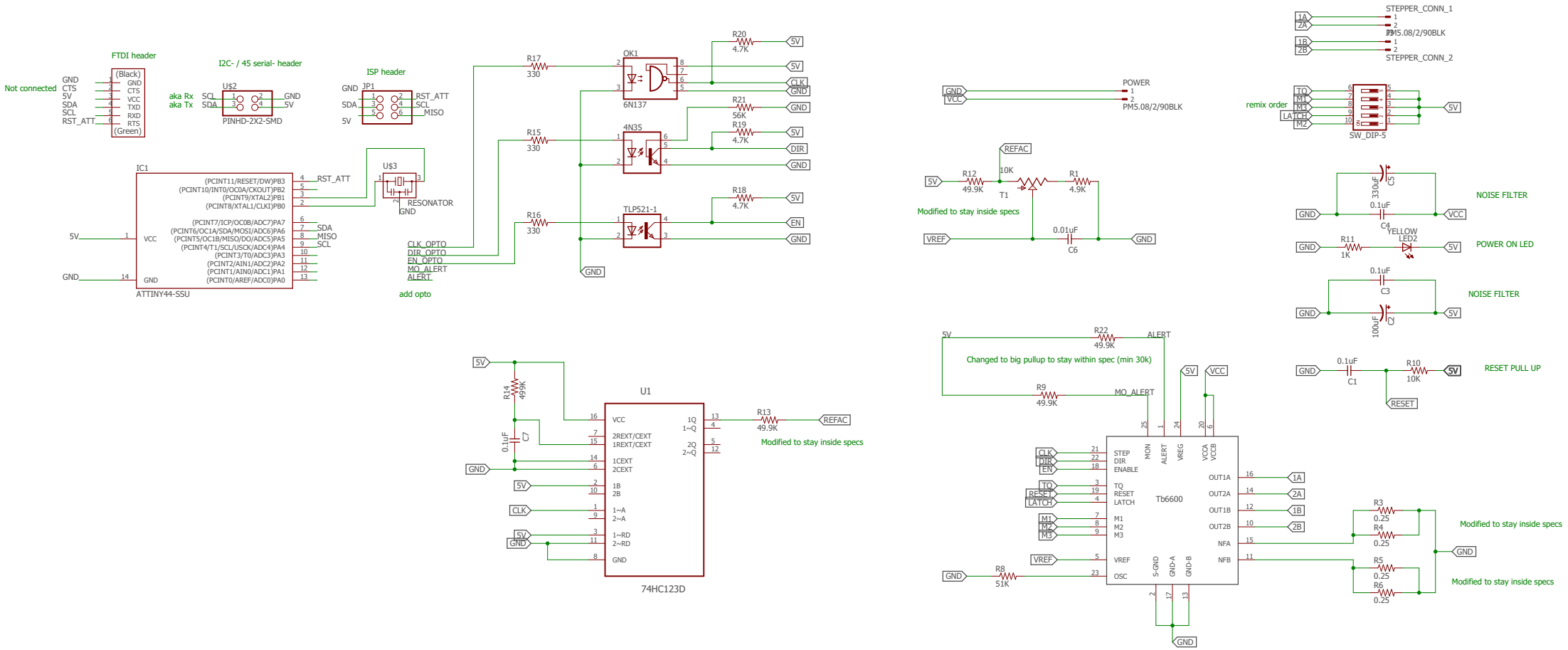
FTDI header
Not connected
GND
CTS
5V
SDA
SCL
RST_ATT
(Black)
(Green)
I2C- / 45 serial- header
aka Rx
aka Tx
U$2
PINHD-2X2-SMD
ISP header
JP1
RST_ATT
MISO
IC1
ATTINY44-SSU
U$3
RESONATOR
(PCINT11/RESET/DW)PB3
(PCINT10/INT0/OC0A/CKOUT)PB2
(PCINT9/XTAL2)PB1
(PCINT8/XTAL1/CLKI)PB0
(PCINT7/ICP/OC0B/ADC7)PA7
(PCINT6/OC1A/SDA/MOSI/ADC6)PA6
(PCINT5/OC1B/MISO/DO/ADC5)PA5
(PCINT4/T1/SCL/USCK/ADC4)PA4
(PCINT3/T0/ADC3)PA3
(PCINT2/AIN1/ADC2)PA2
(PCINT1/AIN0/ADC1)PA1
(PCINT0/AREF/ADC0)PA0
VCC
GND
CLK_OPTO
DIR_OPTO
EN_OPTO
MO_ALERT
ALERT
add opto
R17
330
R15
330
R16
330
OK1
6N137
4N35
TLP521-1
R20
4.7K
R21
56K
R19
4.7K
R18
4.7K
5V
CLK
DIR
EN
POWER
PM5.08/2/90BLK
STEPPER_CONN_1
STEPPER_CONN_2
remix order
SW_DIP-5
REFAC
R12
49.9K
10K
T1
R1
4.9K
Modified to stay inside specs
VREF
0.01uF
C6
330uF
C5
0.1uF
C4
NOISE FILTER
YELLOW
LED2
R11
1K
POWER ON LED
C3
C2
100uF
R22
49.9K
ALERT
Changed to big pullup to stay within spec (min 30k)
R9
49.9K
MO_ALERT
C1
R10
10K
RESET PULL UP
RESET
U1
74HC123D
R14
49.9K
C7
R13
49.9K
Modified to stay inside specs
Tb6600
STEP
DIR
ENABLE
TQ
RESET
LATCH
M1
M2
M3
VREF
OSC
MON
ALERT
VREG
VCCA
VCCB
OUT1A
OUT2A
OUT1B
OUT2B
NFA
NFB
S-GND
GND-A
GND-B
R8
51K
R3
0.25
R4
0.25
R5
0.25
R6
0.25
Modified to stay inside specs
Modified to stay inside specs